EKWL-ESWL-A4.400-GC2K-x
Actuator and Sensor Cordset – Extension Cable

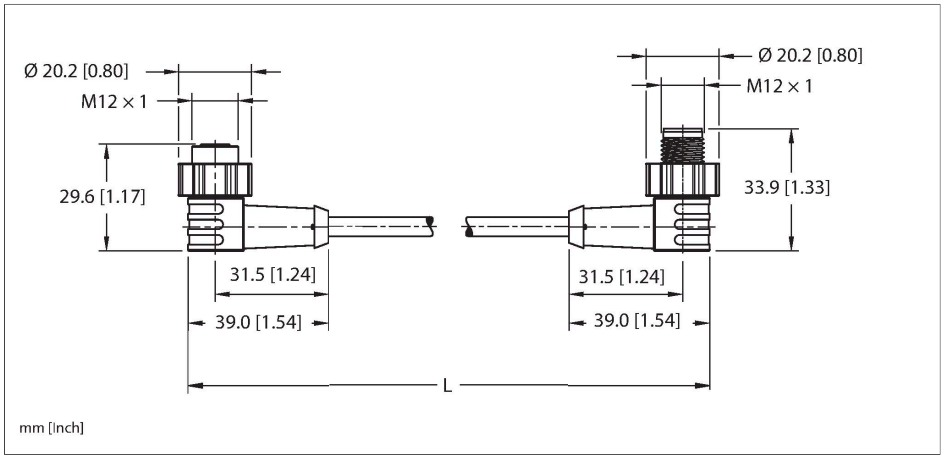

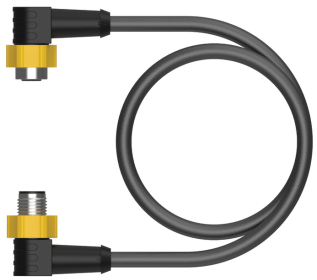

Technical data

Type	EKWL-ESWL-A4.400-GC2K-x
ID	777046695
Replaces	WKV 4.4T-x-WSV 4.4T
Connector A	Female, M12 × 1, Right angle, A-code
Design specification	Acc. to IEC 61076-2-101
Number of contacts	4
Contacts	Bronze, CuSn, Gold-plated
Contact carriers	Plastic, Nylon or TPU, Black
Connector body	Plastic, TPU, Black
Coupling nut	Stainless Steel, 316L (1.4404), Passivated
Connector seal	O-ring, Plastic, FKM/FPM
Torque sleeve	Plastic, PA, Yellow
Tightening torque (range)	0.4 … 1.8 Nm (note max. torque of mating connector!)
Mechanical life	> 100 Mating cycles
Pollution degree	3
Protection class (When coupled)	IP67, IP68, IP69, IP69K
	NEMA: 1, 3, 4, 4X, 6P, 12
Connector B	Male, M12 × 1, Right angle, A-code
Design specification	Acc. to IEC 61076-2-101
Number of contacts	4
Contacts	Bronze, CuZn, Gold-plated
Contact carriers	Plastic, Nylon or TPU, Black
Connector body	Plastic, TPU, Black

Features

- M12, Female, Right angle, 4-pin, Torque sleeve
- M12, Male, Right-angle, 4-pin, Torque sleeve
- Instrumentation Tray Cable
- Black PVC jacket, 4X22 AWG
- Sunlight Resistant
- -40 Cold Bend Rating
- Oil Resistant
- Flame Ratings: UL 1685 FT4, UL1061, CSA FT4
- Flexlife® and C-Track Approved

Cable cross section

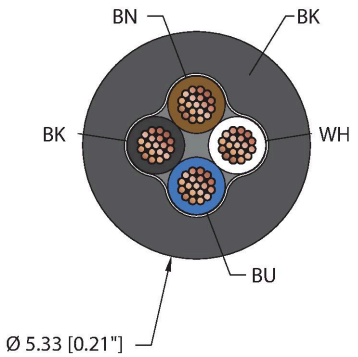

Contact assignment

EKWL-ESWL-A4.400-GC2K-x| 07/03/2023 07-43 | technical changes reserved

Technical data

Coupling nut	Stainless Steel, 316L (1.4404), Passivated
Torque sleeve	Plastic, PA, Yellow
Tightening torque	0.4 … 1.8 Nm (note max. torque of mating connector!)
Mechanical life	> 100 Mating cycles
Pollution degree	3
Protection class (When coupled)	IP67, IP68, IP69, IP69K
	NEMA: 1, 3, 4, 6P, 12
Cable data	
Cable ID	RF50983
Total number of conductors	4
Cable diameter	Ø 5.33 mm
Cable jacket	PVC, Black
Conductor diameter	0.054 "
Conductor material	TC (tinned copper)
Conductor insulation material	PVC
Conductor size	4 x 22 AWG [Similar to 0.34 mm²]
Number of strands x O.D.	19 x 0.0058 "
Conductor colors	BN, WH, BU, BK
Electrical properties at +20 °C	
Rated voltage	250 V_{AC}/300 V_{DC}
Current	4 A
Mechanical and chemical properties	
Bending radius (static)	≥ 5 x Ø
Bending radius (dynamic)	≥ 10 x Ø
UL cold bend rating	-40 °C
Flex rating 20 x Ø	10 million cycles*
	*When properly installed @ 20°C, 50%RH, and a cycle speed of ≤0.5 cycles per second.
C-Track	Yes
Ambient temperature range (static)	-40 °C…+105 °C
Ambient temperature range (dynamic)	5 °C…+105 °C
Temperature range (installation)	-10 °C…+105 °C
Approval	
Approvals	UL 2238 CSA C22.2 No. 182.3 CE UKCA RoHS

Connector A Connector B

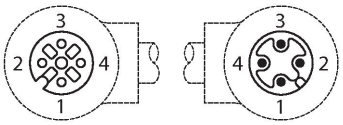

Circuit Diagram

EKWL-ESWL-A4.400-GC2K-x| 07/03/2023 07-43 | technical changes reserved

Technical data

Note	
	- Flex ratings may be reduced if used in extreme temperatures, exposure to certain chemicals, operating above the rated cycle speed, or operating below the rated cable bend radius.
	- The torque sleeve can be removed, before or after installation by inserting a small flat screwdriver near the relief by the arrow and prying.
	- We reserve the right to make technical alterations without prior notice.

Accessories

M12-TORQUE-SLEEVE,YELLOW(10PACK) **A900167**

10 Pack of Yellow Torque Sleeves for the new M12 cordsets. Compatible with male, female, straight and right-angled, stainless steel and nickel-plated brass coupling nuts.

TORQUE-WRENCH-SET-M12/SW13 **A900152**

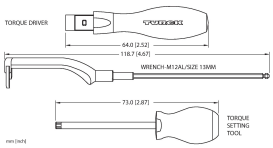

Adjustable torque driver to connect to the 13mm hex. Compatible with redesigned M12 cordsets, M12 Power, and M12 X-code. NOT Compatible with legacy M12 cordsets. Includes (1) adjustable torque driver, (1) adjustment tool, and (1) 13mm forked bit.

Accessories

M12-CORDSETS-MOUNTING-CLIP-(10/BAG) **100016882**

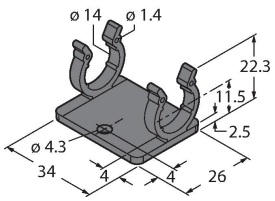

10 Pack of black mounting clips and M4x8mm mounting screws, used to secure cable to cable connection points.

EKWL-ESWL-A4.400-GC2K-x| 07/03/2023 07-43 | technical changes reserved